TECHNICAL SPECIFICATIONS - BAGGER:
- WEIGHT: 368 lbs [167kg] with AB 255
- ELECTRICAL: 110/230 VAC; 50/60 Hz; 12/6 AMPS
- AIR: 5 CFM@80 PSI [142 litre/min] CLEAN DRY AIR
- BAG SIZES: W 4 to 16 in. L 5.5 to 27 in.

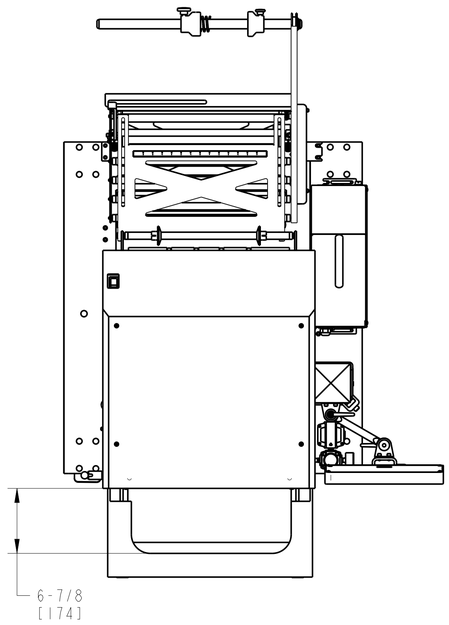

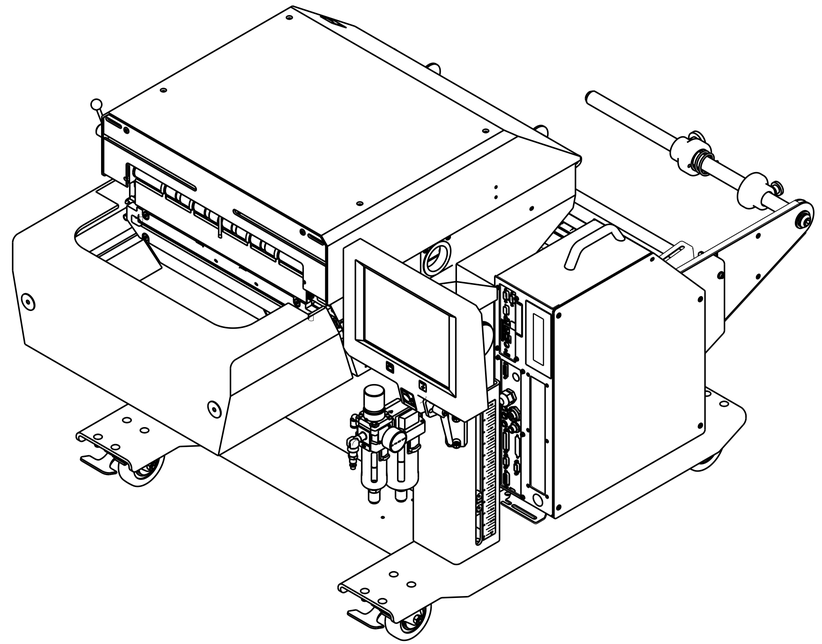

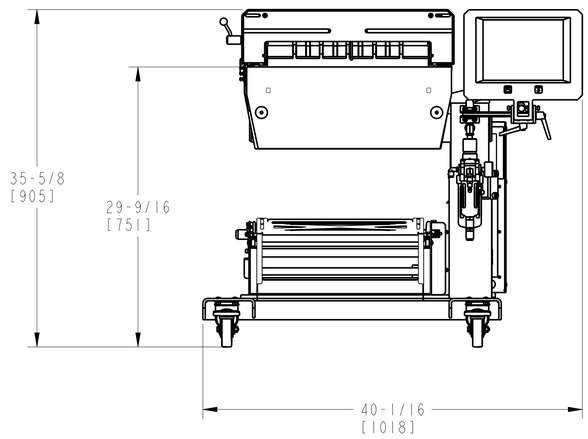

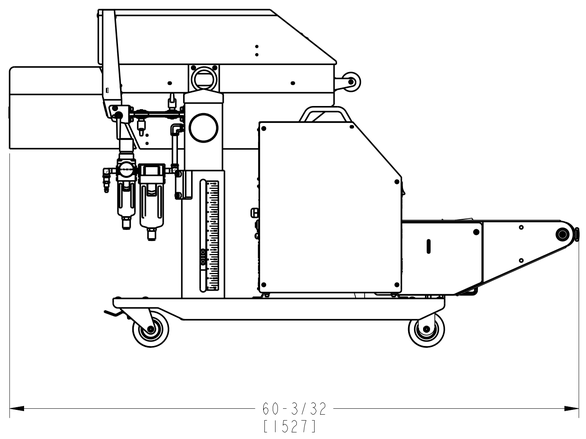

REV	BY	DATE	ECN	DESCRIPTION
A	RCK	03-28-16	463	NEW DRAWING

FINISH: NONE

MATERIAL:

MACHINE SURFACES TO BE NO GREATER THAN 125 [3.2] ✓
UNLESS OTHERWISE NOTED
PART MUST BE FREE OF BURRS AND SHARP EDGES

TOLERANCE	INCHES	mm
1 PLACE DIMS	± .1	±2.5
2 PLACE DIMS	± .02	±0.51
3 PLACE DIMS	± .005	±0.10
ANGULAR	± 1/2°	

NOTICE: THIS DOCUMENT CONTAINS PROPRIETARY INFORMATION AND IT SHALL NOT BE USED OR REPRODUCED OR ITS CONTENT DISCLOSED, IN WHOLE OR PART, WITHOUT THE PRIOR WRITTEN CONSENT OF AUTOMATED PACKAGING SYSTEMS INC.

INCH [MM] | THIRD ANGLE PROJECTION

Concept

Automated PACKAGING SYSTEMS
10175 PHILIPP PARKWAY · STREETSBORO, OH 44241

DRAWING SIZE	SCALE	DRAWN BY	BOM REFERENCE NUMBER
D	0.125	NAME: RCK DATE: 03-28-16	

TITLE: ASS'Y AB255

DRAWING NO.: FP110

SHEET 1 OF 1

REV: A

Fabricated & Documented to be RoHS Compliant